A1

B1

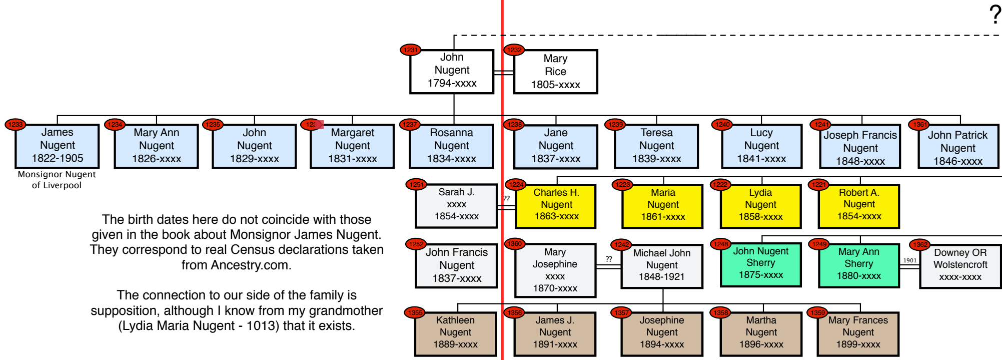
?
1231
John
Nugent
1794-xxxx
1232
Mary
Rice
1805-xxxx
1233
James
Nugent
1822-1905
Monsignor Nugent
of Liverpool
1234
Mary Ann
Nugent
1826-xxxx
1235
John
Nugent
1829-xxxx
123
Margaret
Nugent
1831-xxxx
1237
Rosanna
Nugent
1834-xxxx
1238
Jane
Nugent
1837-xxxx
1239
Teresa
Nugent
1839-xxxx
1240
Lucy
Nugent
1841-xxxx
1241
Joseph Francis
Nugent
1848-xxxx
1361
John Patrick
Nugent
1846-xxxx
1251
Sarah J.
xxxx
1854-xxxx
??
1224
Charles H.
Nugent
1863-xxxx
1223
Maria
Nugent
1861-xxxx
1222
Lydia
Nugent
1858-xxxx
1221
Robert A.
Nugent
1854-xxxx
1252
John Francis
Nugent
1837-xxxx
1360
Mary
Josephine
xxxx
1870-xxxx
??
1242
Michael John
Nugent
1848-1921
1248
John Nugent
Sherry
1875-xxxx
1249
Mary Ann
Sherry
1880-xxxx
1901
1362
Downey OR
Wolstencroft
xxxx-xxxx
1355
Kathleen
Nugent
1889-xxxx
1356
James J.
Nugent
1891-xxxx
1357
Josephine
Nugent
1894-xxxx
1358
Martha
Nugent
1896-xxxx
1359
Mary Frances
Nugent
1899-xxxx

The birth dates here do not coincide with those given in the book about Monsignor James Nugent. They correspond to real Census declarations taken from Ancestry.com.

The connection to our side of the family is supposition, although I know from my grandmother (Lydia Maria Nugent - 1013) that it exists.

To be explored during a future visit to Drogheda

This is the third of three diagrams of our Nugent descendants.

It has the Vector ID : 3, and Vector codes for all Nugent descendants here range from :

3A1 to 3T1

C1

D

????

Drogheda, County Lough

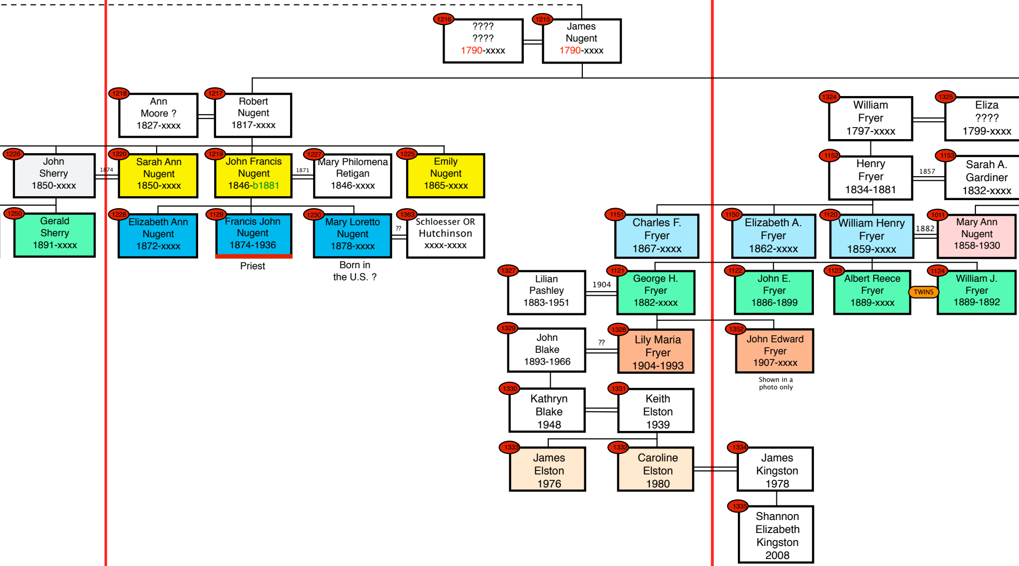

1216 ???? ???? 1790-xxxx

1215 James Nugent 1790-xxxx

1218 Ann Moore ? 1827-xxxx

1217 Robert Nugent 1817-xxxx

1226 John Sherry 1850-xxxx

1874

1220 Sarah Ann Nugent 1850-xxxx

1219 John Francis Nugent 1846-b1881

1871

1227 Mary Philomena Retigan 1846-xxxx

1225 Emily Nugent 1865-xxxx

1250 Gerald Sherry 1891-xxxx

1228 Elizabeth Ann Nugent 1872-xxxx

1129 Francis John Nugent 1874-1936

Priest

1230 Mary Loretto Nugent 1878-xxxx

Born in the U.S. ?

??

1363 Schloesser OR Hutchinson xxxx-xxxx

1324 William Fryer 1797-xxxx

1325 Eliza ???? 1799-xxxx

1152 Henry Fryer 1834-1881

1857

1153 Sarah A. Gardiner 1832-xxxx

1151 Charles F. Fryer 1867-xxxx

1150 Elizabeth A. Fryer 1862-xxxx

1120 William Henry Fryer 1859-xxxx

1882

1011 Mary Ann Nugent 1858-1930

1327 Lilian Pashley 1883-1951

1904

1121 George H. Fryer 1882-xxxx

1122 John E. Fryer 1886-1899

1123 Albert Reece Fryer 1889-xxxx

TWINS

1124 William J. Fryer 1889-1892

1329 John Blake 1893-1966

??

1328 Lily Maria Fryer 1904-1993

1352 John Edward Fryer 1907-xxxx

Shown in a photo only

1330 Kathryn Blake 1948

1331 Keith Elston 1939

1333 James Elston 1976

1332 Caroline Elston 1980

1334 James Kingston 1978

1335 Shannon Elizabeth Kingston 2008

1

E1

I must be honest here. Although my aunt declared that three Moore sisters married three Nugent brothers, I cannot verify this information against the available data. The loss of Irish Genealogy data in the fire of 1822 in Dublin may hide this information forever.

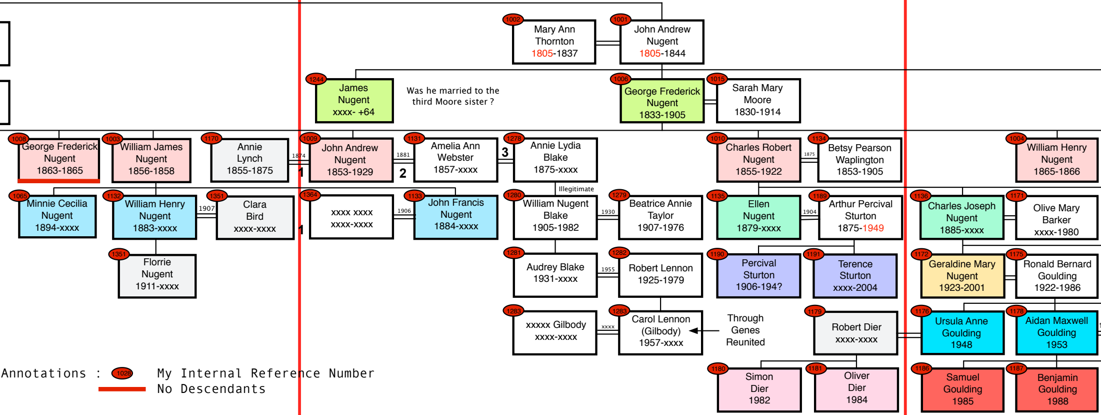
1002
Mary Ann Thornton 1805-1837
1001
John Andrew Nugent 1805-1844
1244
James Nugent xxxx- +64
Was he married to the third Moore sister ?
1006
George Frederick Nugent 1833-1905
1015
Sarah Mary Moore 1830-1914
1008
George Frederick Nugent 1863-1865
1003
William James Nugent 1856-1858
1170
Annie Lynch 1855-1875
1874
1
1009
John Andrew Nugent 1853-1929
1881
2
1131
Amelia Ann Webster 1857-xxxx
3
1278
Annie Lydia Blake 1875-xxxx
1010
Charles Robert Nugent 1855-1922
1875
1134
Betsy Pearson Waplington 1853-1905
1004
William Henry Nugent 1865-1866
1065
Minnie Cecilia Nugent 1894-xxxx
1132
William Henry Nugent 1883-xxxx
1907
1351
Clara Bird xxxx-xxxx
1
1364
xxxx xxxx xxxx-xxxx
1906
1133
John Francis Nugent 1884-xxxx
Illegitimate
1280
William Nugent Blake 1905-1982
1930
1279
Beatrice Annie Taylor 1907-1976
1135
Ellen Nugent 1879-xxxx
1904
1189
Arthur Percival Sturton 1875-1949
1136
Charles Joseph Nugent 1885-xxxx
1171
Olive Mary Barker xxxx-1980
1351
Florrie Nugent 1911-xxxx
1281
Audrey Blake 1931-xxxx
1955
1282
Robert Lennon 1925-1979
1190
Percival Sturton 1906-194?
1191
Terence Sturton xxxx-2004
1172
Geraldine Mary Nugent 1923-2001
1175
Ronald Bernard Goulding 1922-1986
1283
xxxxx Gilbody xxxx-xxxx
xxxx
1283
Carol Lennon (Gilbody) 1957-xxxx
Through Genes Reunited
1179
Robert Dier xxxx-xxxx
1176
Ursula Anne Goulding 1948
1178
Aidan Maxwell Goulding 1953
1180
Simon Dier 1982
1181
Oliver Dier 1984
1186
Samuel Goulding 1985
1187
Benjamin Goulding 1988

Annotations :	1028	My Internal Reference Number
	▬	No Descendants
Dates :	1861	Date is certain
	1861	Exact date is uncertain
	b1861	Died before this date
	1861	Date is estimated (DOB only)
	xxxx	Date is unknown

F1

G1

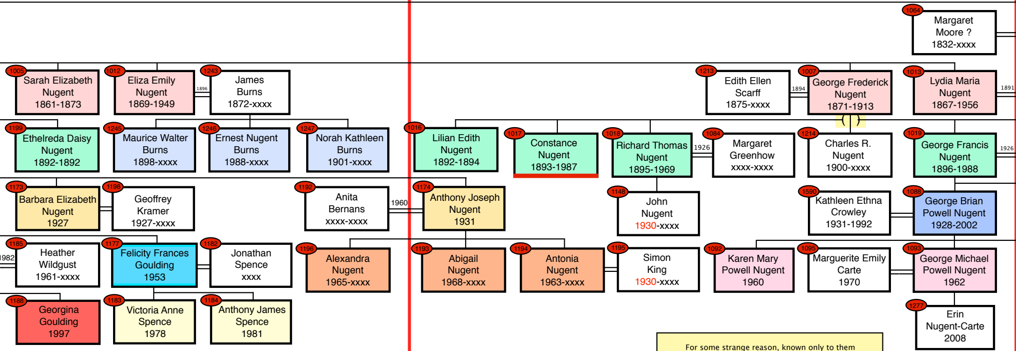
1064 Margaret Moore ? 1832-xxxx
1005 Sarah Elizabeth Nugent 1861-1873
1012 Eliza Emily Nugent 1869-1949
1896
1243 James Burns 1872-xxxx
1213 Edith Ellen Scarff 1875-xxxx
1894
1007 George Frederick Nugent 1871-1913
1013 Lydia Maria Nugent 1867-1956
1891
1199 Ethelreda Daisy Nugent 1892-1892
1245 Maurice Walter Burns 1898-xxxx
1246 Ernest Nugent Burns 1988-xxxx
1247 Norah Kathleen Burns 1901-xxxx
1016 Lilian Edith Nugent 1892-1894
1017 Constance Nugent 1893-1987
1018 Richard Thomas Nugent 1895-1969
1926
1084 Margaret Greenhow xxxx-xxxx
1214 Charles R. Nugent 1900-xxxx
1019 George Francis Nugent 1896-1988
1926
1173 Barbara Elizabeth Nugent 1927
1198 Geoffrey Kramer 1927-xxxx
1192 Anita Bernans xxxx-xxxx
1960
1174 Anthony Joseph Nugent 1931
1148 John Nugent 1930-xxxx
1590 Kathleen Ethna Crowley 1931-1992
1088 George Brian Powell Nugent 1928-2002
982
1185 Heather Wildgust 1961-xxxx
1177 Felicity Frances Goulding 1953
1182 Jonathan Spence xxxx
1196 Alexandra Nugent 1965-xxxx
1193 Abigail Nugent 1968-xxxx
1194 Antonia Nugent 1963-xxxx
1195 Simon King 1930-xxxx
1092 Karen Mary Powell Nugent 1960
1095 Marguerite Emily Carte 1970
1093 George Michael Powell Nugent 1962
1188 Georgina Goulding 1997
1183 Victoria Anne Spence 1978
1184 Anthony James Spence 1981
1277 Erin Nugent-Carte 2008

For some strange reason, known only to them the Powell/Nugent males always used their second Christian Name :

And so : George Francis was "Uncle Frank"
George Brian was "Cousin Brian"

and it should not surprise you to know that :

George Michael is known as "Michael"
and David Gavin is known as "Gavin"

Happily : Karen is known as "Karen"

H1

I1

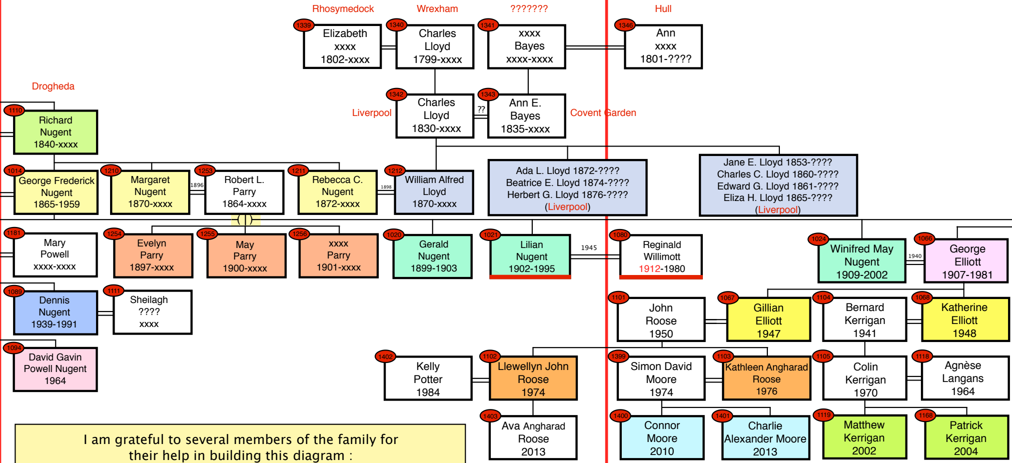

Rhosymedock
Wrexham
???????
Hull
1339 Elizabeth xxxx 1802-xxxx
1340 Charles Lloyd 1799-xxxx
1341 xxxx Bayes xxxx-xxxx
1346 Ann xxxx 1801-????
Drogheda
Liverpool
1342 Charles Lloyd 1830-xxxx
??
1343 Ann E. Bayes 1835-xxxx
Covent Garden
1110 Richard Nugent 1840-xxxx
1014 George Frederick Nugent 1865-1959
1210 Margaret Nugent 1870-xxxx
1896
1253 Robert L. Parry 1864-xxxx
1211 Rebecca C. Nugent 1872-xxxx
1898
1212 William Alfred Lloyd 1870-xxxx
Ada L. Lloyd 1872-????
Beatrice E. Lloyd 1874-????
Herbert G. Lloyd 1876-????
(Liverpool)
Jane E. Lloyd 1853-????
Charles C. Lloyd 1860-????
Edward G. Lloyd 1861-????
Eliza H. Lloyd 1865-????
(Liverpool)
1181 Mary Powell xxxx-xxxx
1254 Evelyn Parry 1897-xxxx
1255 May Parry 1900-xxxx
1256 xxxx Parry 1901-xxxx
1020 Gerald Nugent 1899-1903
1021 Lilian Nugent 1902-1995
1945
1080 Reginald Willimott 1912-1980
1024 Winifred May Nugent 1909-2002
1940
1066 George Elliott 1907-1981
1089 Dennis Nugent 1939-1991
1111 Sheilagh ???? xxxx
1101 John Roose 1950
1067 Gillian Elliott 1947
1104 Bernard Kerrigan 1941
1068 Katherine Elliott 1948
1094 David Gavin Powell Nugent 1964
1402 Kelly Potter 1984
1102 Llewellyn John Roose 1974
1399 Simon David Moore 1974
1103 Kathleen Angharad Roose 1976
1105 Colin Kerrigan 1970
1118 Agnèse Langans 1964
1403 Ava Angharad Roose 2013
1400 Connor Moore 2010
1401 Charlie Alexander Moore 2013
1119 Matthew Kerrigan 2002
1168 Patrick Kerrigan 2004

I am grateful to several members of the family for
their help in building this diagram :

1 – Felicity Spence for recent Nugent descendants in Nottingham,
2 – Cousins Gillian and Kathryn for recent Nugent descendants in Anglesey and North Wales,
3 – Carol Gilbody for data concerning recent Blake/Lennon descendants,
4 – Cousin Karen for data concerning recent Nugents in Africa,
5 – Canadian cousins Dulcie/Germaine/Sabina/Nadege for recent descendants of the Dixon/Sellis branch.

J1

K1

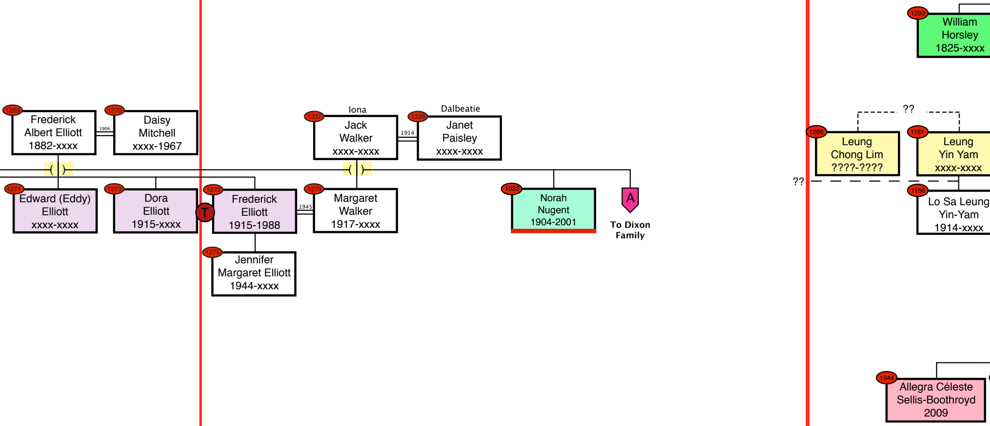
1293
William
Horsley
1825-xxxx
1269
Frederick
Albert Elliott
1882-xxxx
1906
1270
Daisy
Mitchell
xxxx-1967
Iona
1337
Jack
Walker
xxxx-xxxx
1914
Dalbeatie
1338
Janet
Paisley
xxxx-xxxx
??
1286
Leung
Chong Lim
????-????
1161
Leung
Yin Yam
xxxx-xxxx
??
1271
Edward (Eddy)
Elliott
xxxx-xxxx
1273
Dora
Elliott
1915-xxxx
T
1272
Frederick
Elliott
1915-1988
1945
1274
Margaret
Walker
1917-xxxx
1022
Norah
Nugent
1904-2001
A
To Dixon
Family
1156
Lo Sa Leung
Yin-Yam
1914-xxxx
1275
Jennifer
Margaret Elliott
1944-xxxx
1344
Allegra Céleste
Sellis-Boothroyd
2009

This diagram corresponds to Section Three of our Nugent Family Tree
(protected by passwords in the nugent.fr Internet site.)

It was originally based on the annotations concerning our recent Nugent Family noted in our family bible, Several generations of the family added information concerning the new family members. However, with the help of Internet sites such as Ancestry.com, and FreeBMD.com (Births, Marriages & Deaths), I have added to our data, concerning names, dates and locations of those members. With this information, we finally merge our branch of the family into the Westmeath–Drogheda marriages between the Nugents and the Moores of the late eighteenth century (three Moore sisters marrying three Nugent brothers).

V 18.6 – Carnac – Brittany – May 18 – 2016

L1

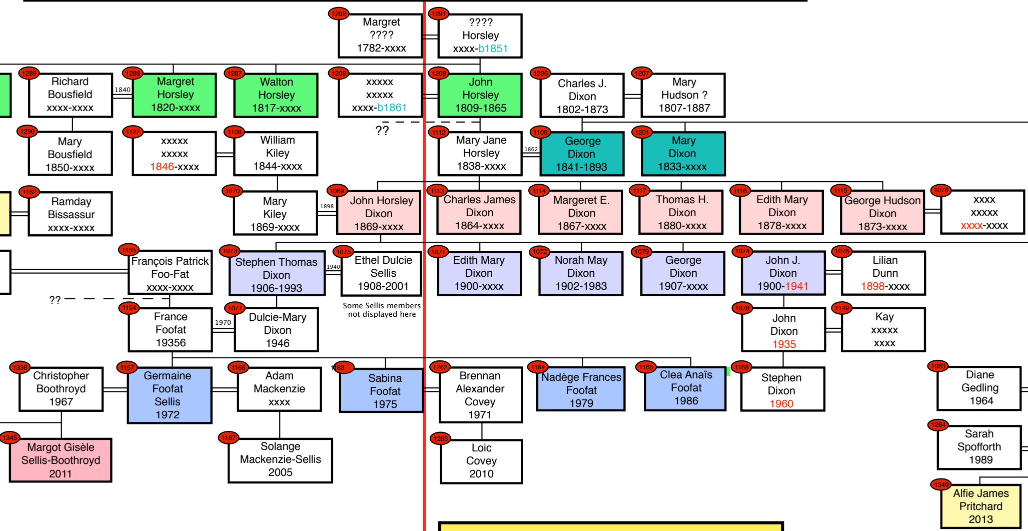

1292 Margret ???? 1782-xxxx
1291 ???? Horsley xxxx-b1851
1289 Richard Bousfield xxxx-xxxx
1840
1288 Margret Horsley 1820-xxxx
1287 Walton Horsley 1817-xxxx
1209 xxxxx xxxxx xxxx-b1861
1208 John Horsley 1809-1865
1206 Charles J. Dixon 1802-1873
1207 Mary Hudson ? 1807-1887
??
1290 Mary Bousfield 1850-xxxx
1127 xxxxx xxxxx 1846-xxxx
1108 William Kiley 1844-xxxx
1112 Mary Jane Horsley 1838-xxxx
1862
1109 George Dixon 1841-1893
1201 Mary Dixon 1833-xxxx
1162 Ramday Bissassur xxxx-xxxx
1070 Mary Kiley 1869-xxxx
1898
1069 John Horsley Dixon 1869-xxxx
1113 Charles James Dixon 1864-xxxx
1114 Margeret E. Dixon 1867-xxxx
1117 Thomas H. Dixon 1880-xxxx
1116 Edith Mary Dixon 1878-xxxx
1115 George Hudson Dixon 1873-xxxx
1076 xxxx xxxxx xxxx-xxxx
1155 François Patrick Foo-Fat xxxx-xxxx
1073 Stephen Thomas Dixon 1906-1993
1940
1075 Ethel Dulcie Sellis 1908-2001
Some Sellis members not displayed here
1071 Edith Mary Dixon 1900-xxxx
1072 Norah May Dixon 1902-1983
1079 George Dixon 1907-xxxx
1074 John J. Dixon 1900-1941
1076 Lilian Dunn 1898-xxxx
??
1154 France Foofat 19356
1970
1077 Dulcie-Mary Dixon 1946
1078 John Dixon 1935
1149 Kay xxxxx xxxx
1336 Christopher Boothroyd 1967
1157 Germaine Foofat Sellis 1972
1166 Adam Mackenzie xxxx
1163 Sabina Foofat 1975
1262 Brennan Alexander Covey 1971
1164 Nadège Frances Foofat 1979
1165 Clea Anaïs Foofat 1986
1168 Stephen Dixon 1960
1083 Diane Gedling 1964
1345 Margot Gisèle Sellis-Boothroyd 2011
1167 Solange Mackenzie-Sellis 2005
1263 Loic Covey 2010
1284 Sarah Spofforth 1989
1349 Alfie James Pritchard 2013

July - 2016

Added missing information on Segments L1/M1 concerning recent Pritchard descendants

M1

N1

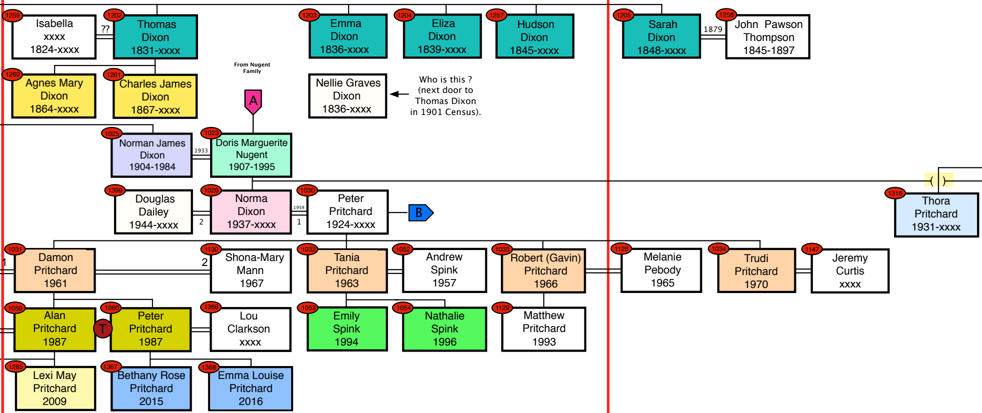
1259
Isabella
xxxx
1824-xxxx
??
1202
Thomas
Dixon
1831-xxxx
1203
Emma
Dixon
1836-xxxx
1204
Eliza
Dixon
1839-xxxx
1257
Hudson
Dixon
1845-xxxx
1205
Sarah
Dixon
1848-xxxx
1879
1258
John Pawson
Thompson
1845-1897
1260
Agnes Mary
Dixon
1864-xxxx
1261
Charles James
Dixon
1867-xxxx
From Nugent
Family
A
Nellie Graves
Dixon
1836-xxxx
Who is this ?
(next door to
Thomas Dixon
in 1901 Census).
1025
Norman James
Dixon
1904-1984
1933
1023
Doris Marguerite
Nugent
1907-1995
1399
Douglas
Dailey
1944-xxxx
2
1026
Norma
Dixon
1937-xxxx
1959
1
1030
Peter
Pritchard
1924-xxxx
B
1316
Thora
Pritchard
1931-xxxx
1031
1
Damon
Pritchard
1961
2
1130
Shona-Mary
Mann
1967
1032
Tania
Pritchard
1963
1052
Andrew
Spink
1957
1033
Robert (Gavin)
Pritchard
1966
1128
Melanie
Pebody
1965
1034
Trudi
Pritchard
1970
1147
Jeremy
Curtis
xxxx
1059
Alan
Pritchard
1987
T
1060
Peter
Pritchard
1987
1366
Lou
Clarkson
xxxx
1053
Emily
Spink
1994
1054
Nathalie
Spink
1996
1129
Matthew
Pritchard
1993
1285
Lexi May
Pritchard
2009
1367
Bethany Rose
Pritchard
2015
1368
Emma Louise
Pritchard
2016

01

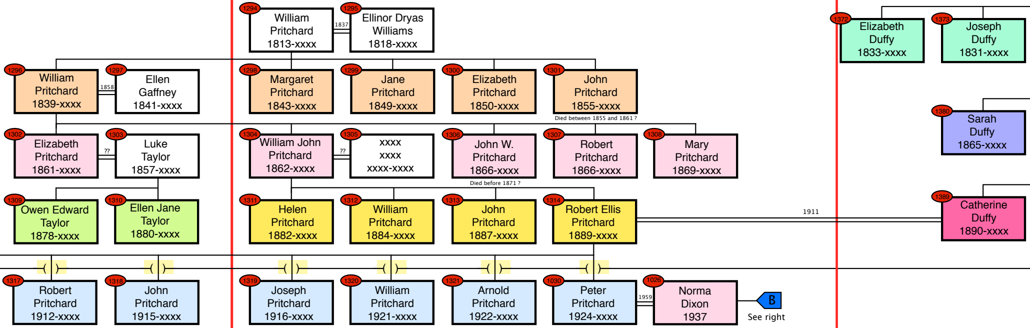
1294 William Pritchard 1813-xxxx
1837
1295 Ellinor Dryas Williams 1818-xxxx
1296 William Pritchard 1839-xxxx
1858
1297 Ellen Gaffney 1841-xxxx
1298 Margaret Pritchard 1843-xxxx
1299 Jane Pritchard 1849-xxxx
1300 Elizabeth Pritchard 1850-xxxx
1301 John Pritchard 1855-xxxx
Died between 1855 and 1861 ?
1372 Elizabeth Duffy 1833-xxxx
1373 Joseph Duffy 1831-xxxx
1302 Elizabeth Pritchard 1861-xxxx
??
1303 Luke Taylor 1857-xxxx
1304 William John Pritchard 1862-xxxx
??
1305 xxxx xxxx xxxx-xxxx
1306 John W. Pritchard 1866-xxxx
Died before 1871 ?
1307 Robert Pritchard 1866-xxxx
1308 Mary Pritchard 1869-xxxx
1380 Sarah Duffy 1865-xxxx
1309 Owen Edward Taylor 1878-xxxx
1310 Ellen Jane Taylor 1880-xxxx
1311 Helen Pritchard 1882-xxxx
1312 William Pritchard 1884-xxxx
1313 John Pritchard 1887-xxxx
1314 Robert Ellis Pritchard 1889-xxxx
1911
1389 Catherine Duffy 1890-xxxx
( )
1317 Robert Pritchard 1912-xxxx
1318 John Pritchard 1915-xxxx
1319 Joseph Pritchard 1916-xxxx
1320 William Pritchard 1921-xxxx
1321 Arnold Pritchard 1922-xxxx
1030 Peter Pritchard 1924-xxxx
1959
1026 Norma Dixon 1937
B
See right

P1

Q1

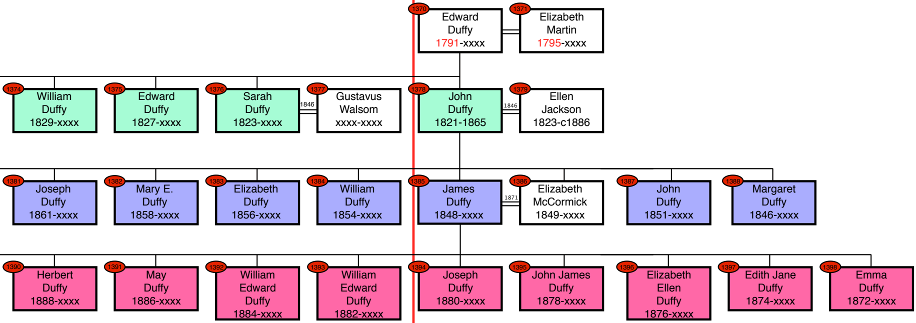
1370 Edward Duffy 1791-xxxx
1371 Elizabeth Martin 1795-xxxx
1374 William Duffy 1829-xxxx
1375 Edward Duffy 1827-xxxx
1376 Sarah Duffy 1823-xxxx
1846
1377 Gustavus Walsom xxxx-xxxx
1378 John Duffy 1821-1865
1846
1379 Ellen Jackson 1823-c1886
1381 Joseph Duffy 1861-xxxx
1382 Mary E. Duffy 1858-xxxx
1383 Elizabeth Duffy 1856-xxxx
1384 William Duffy 1854-xxxx
1385 James Duffy 1848-xxxx
1871
1386 Elizabeth McCormick 1849-xxxx
1387 John Duffy 1851-xxxx
1388 Margaret Duffy 1846-xxxx
1390 Herbert Duffy 1888-xxxx
1391 May Duffy 1886-xxxx
1392 William Edward Duffy 1884-xxxx
1393 William Edward Duffy 1882-xxxx
1394 Joseph Duffy 1880-xxxx
1395 John James Duffy 1878-xxxx
1396 Elizabeth Ellen Duffy 1876-xxxx
1397 Edith Jane Duffy 1874-xxxx
1398 Emma Duffy 1872-xxxx

R1

S1

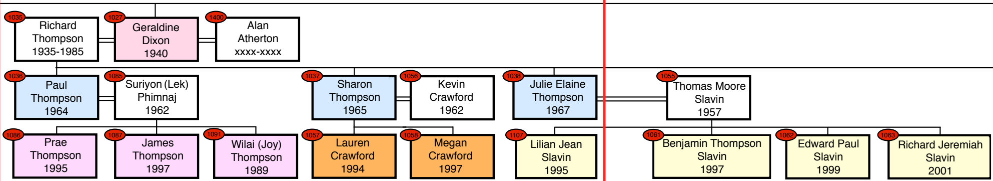
1035
Richard Thompson 1935-1985
1027
Geraldine Dixon 1940
1400
Alan Atherton xxxx-xxxx
1036
Paul Thompson 1964
1085
Suriyon (Lek) Phimnaj 1962
1037
Sharon Thompson 1965
1056
Kevin Crawford 1962
1038
Julie Elaine Thompson 1967
1055
Thomas Moore Slavin 1957
1086
Prae Thompson 1995
1087
James Thompson 1997
1091
Wilai (Joy) Thompson 1989
1057
Lauren Crawford 1994
1058
Megan Crawford 1997
1107
Lilian Jean Slavin 1995
1061
Benjamin Thompson Slavin 1997
1062
Edward Paul Slavin 1999
1063
Richard Jeremiah Slavin 2001

T1

S1

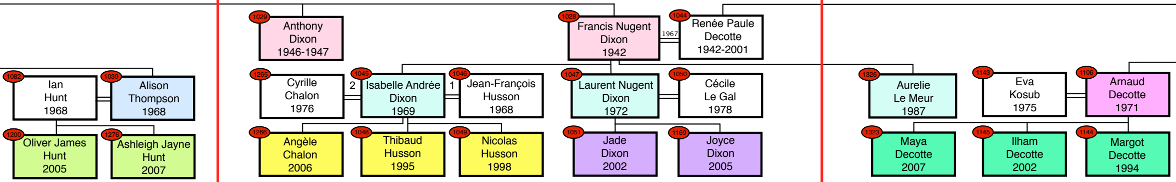
1082
Ian Hunt 1968
1039
Alison Thompson 1968
1200
Oliver James Hunt 2005
1276
Ashleigh Jayne Hunt 2007
1029
Anthony Dixon 1946-1947
1265
Cyrille Chalon 1976
2
1045
Isabelle Andrée Dixon 1969
1
1046
Jean-François Husson 1968
1266
Angèle Chalon 2006
1048
Thibaud Husson 1995
1049
Nicolas Husson 1998
1028
Francis Nugent Dixon 1942
1967
1044
Renée Paule Decotte 1942-2001
1047
Laurent Nugent Dixon 1972
1050
Cécile Le Gal 1978
1051
Jade Dixon 2002
1169
Joyce Dixon 2005
1326
Aurelie Le Meur 1987
1143
Eva Kosub 1975
1106
Arnaud Decotte 1971
1323
Maya Decotte 2007
1145
Ilham Decotte 2002
1144
Margot Decotte 1994

T1

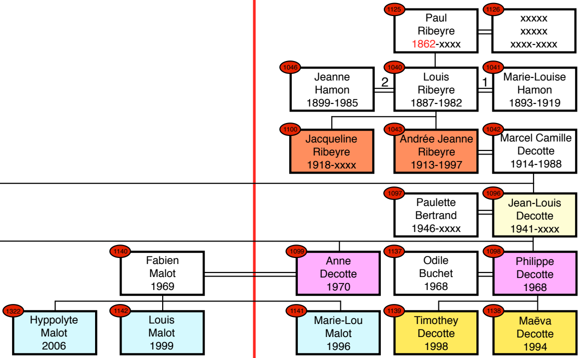
1125
Paul Ribeyre 1862-xxxx
1126
xxxxx xxxxx xxxx-xxxx
1046
Jeanne Hamon 1899-1985
2
1040
Louis Ribeyre 1887-1982
1
1041
Marie-Louise Hamon 1893-1919
1100
Jacqueline Ribeyre 1918-xxxx
1043
Andrée Jeanne Ribeyre 1913-1997
1042
Marcel Camille Decotte 1914-1988
1097
Paulette Bertrand 1946-xxxx
1096
Jean-Louis Decotte 1941-xxxx
1140
Fabien Malot 1969
1099
Anne Decotte 1970
1137
Odile Buchet 1968
1098
Philippe Decotte 1968
1322
Hyppolyte Malot 2006
1142
Louis Malot 1999
1141
Marie-Lou Malot 1996
1139
Timothey Decotte 1998
1138
Maëva Decotte 1994